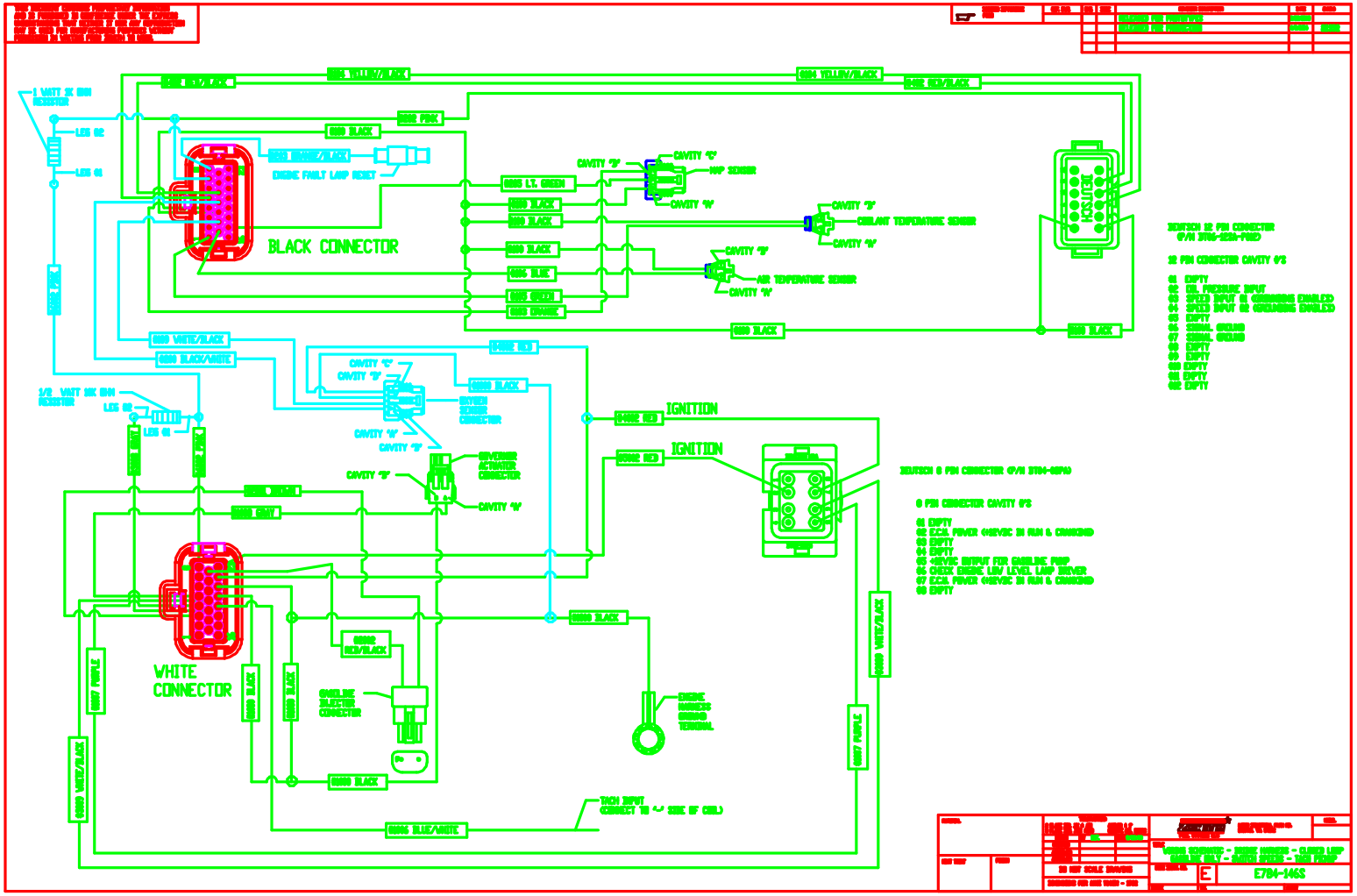
BLACK CONNECTOR
WHITE CONNECTOR
ENGINE FAULT LAMP RESET
MAP SENSOR
COOLANT TEMPERATURE SENSOR
AIR TEMPERATURE SENSOR
IGNITION
IGNITION
TACH INPUT
(CONNECT TO (-) SIDE OF COIL)
DO NOT SCALE DRAWING
E784-146S